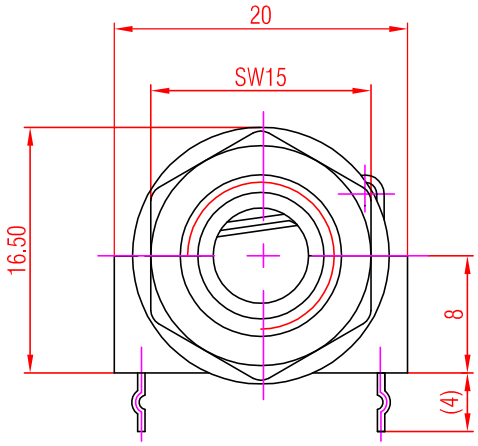

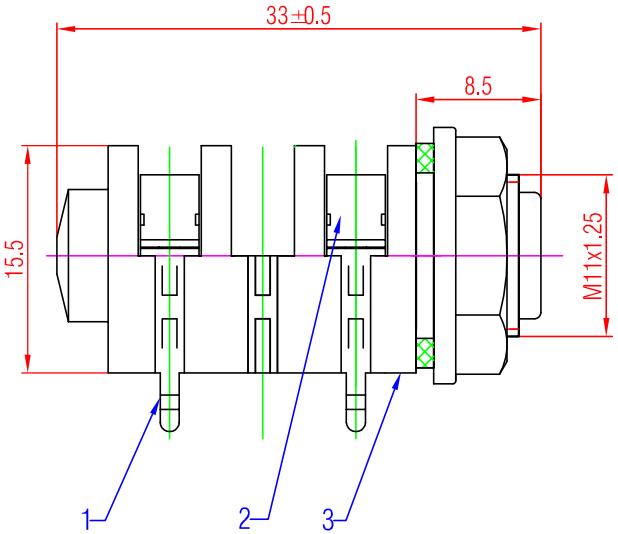

PCB Layout (Component Side)

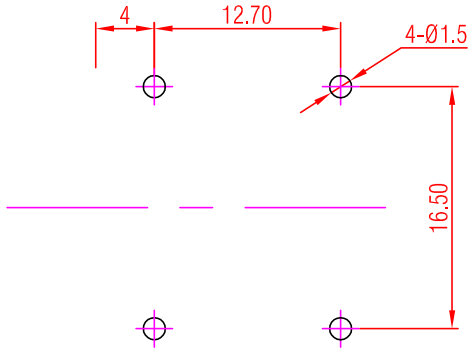

Washer

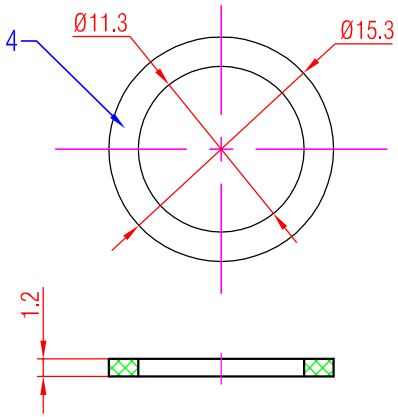

Nut

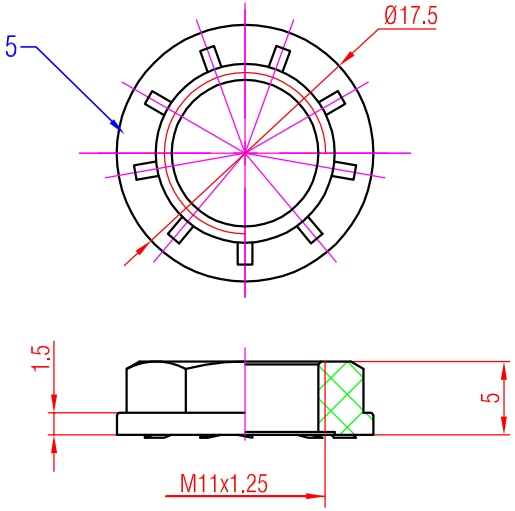

Panel Cut Out (Rear Side)

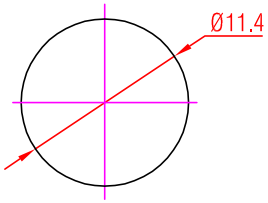

Note:
1. All dimensions in mm.
2. Tolerances not specified is ±0.10mm.
3. Radius not specified is R=0.20mm.

No.	Part Name	Material
5	Nut	PA6 + 30% GF (Black)
4	Washer	ABS (Black)
3	Housing	PA6 + 30% GF (Black)
2	Switched Contact	Phosphor Bronze,Tin-Cer Plated
1	Normalizing Contact	Brass, Tin-Cer Plated

Rev.	Revision Details	Date	Name

THIS DOCUMENT IS THE PROPERTY OF NEUTRIK. NO PART THEREOF MAY BE REPRODUCED AND USED WITHOUT THE PRIOR WRITTEN CONSENT OF THE OWNER

Material:

Scale: 2 : 1

	Date:	Name:
Designer:	2015.05.27	James
Checked:	2015.05.27	Abraham
Approved:		

Title: 1/4" Phone Mono Jacks NYS2162

REAN

Replaced By: 1

Replaces: 1

Drawing No.: